Mansoura Engineering Journal, Vol. 19, No. 3, September 1994

DYNAMIC BEHAVIOUR OF SYNCHRONOUS COMPENSATOR OPERATING ON THE OUTPUT SIDE OF A WIND SYSTEM FEEDING A UTILITY NETWORK

السلوك الديناميكي لمعوض تزامني يعمل على أطراف نظام طاقة رياح يغذي شبكة استخدام

By

M.M.I. EL-SHAMOTY

DEPARTMENT OF ELECTRICAL ENGINEERING, FACULTY OF ENGINEERING, MANSOURA UNIVERSITY, EL-MANSOURA, EGYPT.

الخلاصة : يقدم البحث فكرة استخدام معوض تزامني للحصول على الطاقة الغير فعالة للعاكس الإستاتيكي الموجود على أطراف نظام طاقة رياح يغذي شبكة الإستخدام، والمساهمة أيضاً في احتياجات الشبكة لتلك الطاقة.

هذا النظام يتكون من تربينة الرياح التي تعطي طاقتها على سرعات مختلفة لمولد تيار متردد ثلاثي الأوجه يغذي طاقته خلال نظام موحد/عاكس استاتيكي الى الشبكة على معاملات قدرة تختلف بين الوحدة و0.8 متأخر - كما يمكن استخدام هذا المعوض موفقاً احتياطياً عند الحاجة بخروج النظام من الشبكة أو قصور في كمية طاقة الرياح.

ولدراسة كل من الأداء المستقر والعابر للمعوض التزامني في لحظات تغير سرعة التربينة، في إطار دراسة موحدة لأداء النظام، تم بناء برنامج متكامل للحاسب الآلي تأسيساً على النموذج الرياضي الذي تم استنباطه ليأخذ في الإعتبار أربعة طرق الإستراتيجية التحكم في النظام. وقد تم تمثيل المعوض التزامني في هذا النموذج الرياضي بدائرة مكافئة غير تقليدية ذات نقطة تحويل تخيلية.

وقد أوضح تحليل النتائج أهمية استخدام المعوض التزامني للإسهام في استقرار النظام لسرعة ودقة استجابته للتغيرات المفاجئة الحادثة في سرعة التربينة بالمقارنة بطرق التعويض الإستاتيكية. وقد أوضح التحليل أيضاً أهمية ملفات الإخماد في هذا الإسهام. وبالإضافة الى دراسة الأداء المتوقع للنظام المقترح فإن البرنامج يقدم أداة يمكن بواسطتها اختيار ووضع المواصفات الخاصة بالمعوض التزامني وغيره من عناصر النظام طبقاً للتغيرات المتوقعة في السرعة ومعاملات القدرة المطلوبة.

Abstract

Both dynamic and steady-state behaviours of a synchronous compensator, operating on the output-side of a wind electric energy conversion system, has been investigated. The wind system is assumed to feed its total converted power to an energized utility network. The suggested

---

The paper is recieved in 10/7/1994

configuration aims to release the utility network from its responsibility of supplying the reactive power consumed by the inverter. In addition to active power, the system is also able, according to the compensator rating, to feed the utility with reactive power; improving thereby its voltage regulation. An other advantage is that: in emergency cases, the synchronous compensator can be operated as a standby generating unit.

An integrated computer program for the whole system had been built to study the system behaviour. In this program, the synchronous compensator is represented by an equivalent-circuit, having a fictitious conversion point. The mathematical model considers four types of control strategies. Speed course of wind-turbine is properly simulated and can be easily reconstructed and introduced.

The computed results demonstrate the behaviour of each element in the system, with special focussing on the steady and dynamic behaviours of the synchronous compensator. The analysis presents a helpful-tool for proper dimensioning of the synchronous compensator required for a given system. In addition, its behaviour and stability can be totally analyzed, especially those under the effect of damper winding.

1.Introduction

The principal configuration of the wind energy system under investigation is shown by a single line diagram in figure (1). The mechanical power is delivered through a fixed ratio gear arrangement to a 3-phase alternator, which is connected directly to a full-wave rectifier bridge. This bridge could be controlled or uncontrolled according to the control strategy applied to the input-side; alternator and rectifier. This strategy may follow one of the following types of control [1] :

Type (1)	Free system; without control.
Type (2)	Controlled excitation and uncontrolled rectifier to hold (V_r) constant.
Type (3)	Uncontrolled excitation and controlled rectifier to hold (V_r) constant.
Type (4)	Controlled excitation and uncontrolled rectifier to hold (V_g) constant.

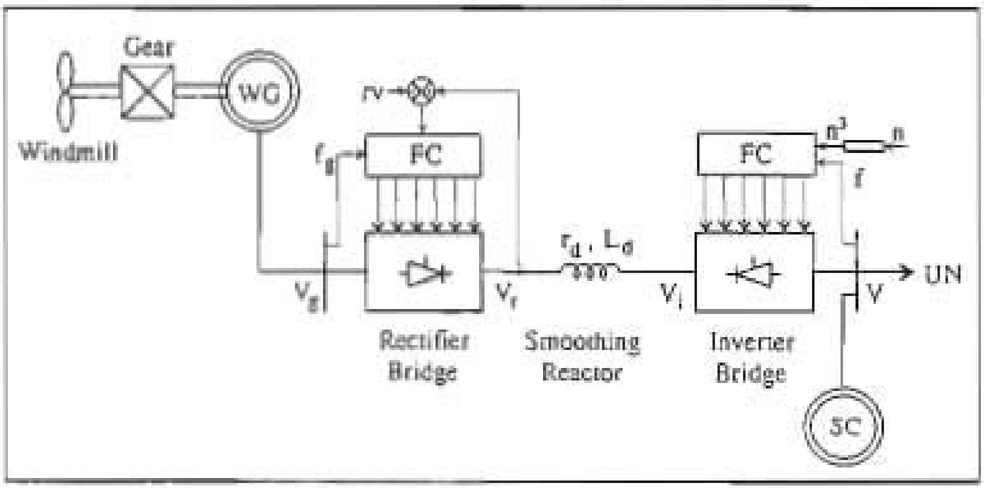

Fig. (1) : Principal Configuration of Wind System

WG : Wind Generator
V_g : Generator Voltage
V_r : Rectifier Voltage
FC : Firing Circuit
f_g : Generator Frequency
n : Rotational Speed

SC : Syn. Compensator
V : Network Voltage
V_i : Inverter Voltage
rv : Reference Voltage
f : Network Frequency
UN : Utility Network

The dc-link output power is supplied to the utility network through a 3-phase inverter-bridge. The inverter is line commutated and controlled according to the linear relation found between the firing-angle and the cube of wind velocity [1]. This control provides smooth and gradual flow of wind power, which has rush nature according to wind speeds. The synchronous-compensator is connected to the output-side of the inverter, which is already synchronized with the utility network.

The primary energy of wind/electric energy conversion system is determined by the uncontrolled wind-speed. Consequently, extreme power and generator-speed variations are expected in the operation of such system. Although the dc-link is a proper solution of the problem of matching the generator frequency to the utility frequency, the existence of the inverter yields a large consumer of reactive power. Therefore, this arises the necessity for a reactive power source, which is suggested here to be a synchronous compensator. Thereby, the utility network is released of supplying reactive power to the inverter.

The analysis presented in this paper considers the inverter and the compensator as one *unified* generating unit synchronized to the utility network. As the inverter supplies the active power, the compensator is responsible mainly for the reactive-power required by the inverter. The power-factor of this unified-unit *(inverter and compensator)* depends on the excitation level of the compensator. It can be adjusted to get unity or 0.8 lagging unified power-factor, see Fig.(2). At unity power factor, the compensator covers only the inverter requirements. At 0.8 lagging power-factor, the excessive reactive power is delivered to the utility; improving thereby the power factor and voltage regulation of the utility.

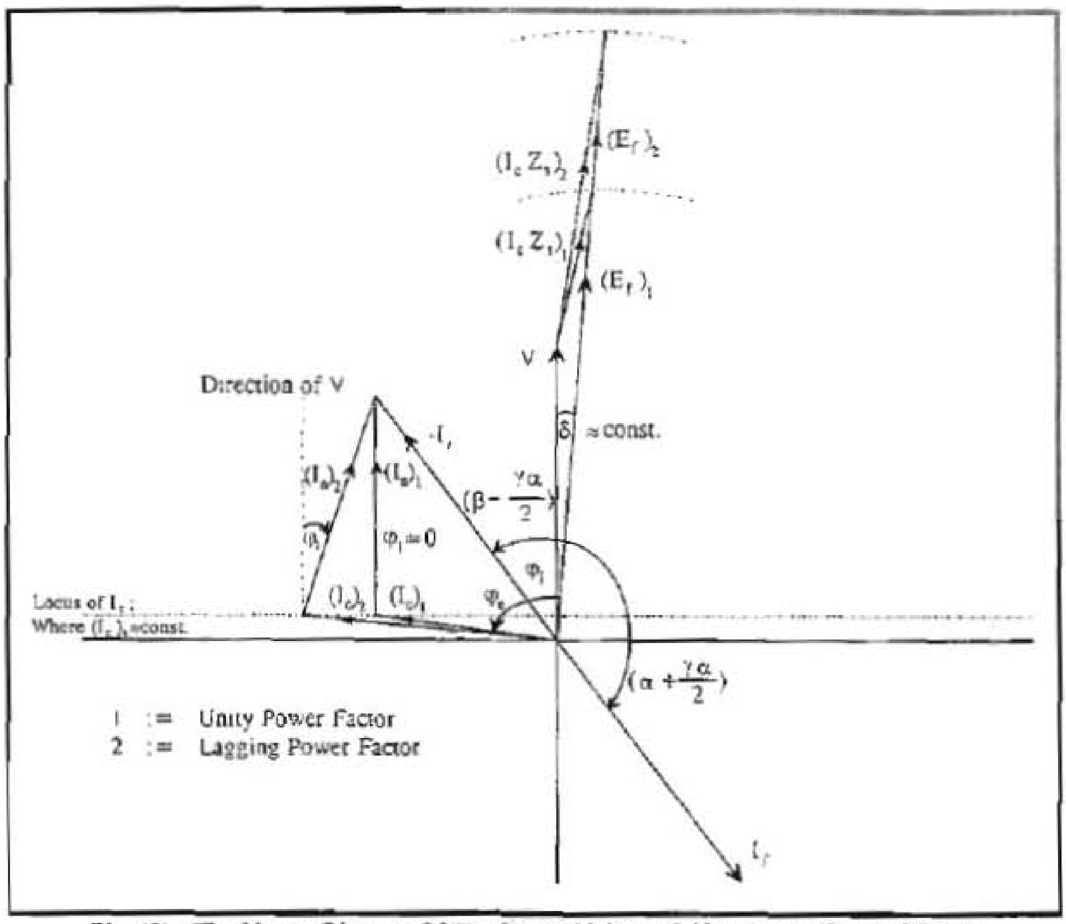

Fig. (2) : The Vector Diagram Of The Incom-Unit At Unified Power Factor Of Unity And 0.8 Lagging.

2. Statement of The Problem

The idea of applying a synchronous compensator in connection with a wind energy system needs special attention in choosing the describing mathematical model and in writing the relevant computer algorithm. The main goal of the presented analysis is to get the steady-state and quasi-dynamic behaviours of the whole suggested system; especially those of the compensator.

Additional objects of the analysis are:

❶ Study the effect of excitation-level and damping-circuit of the compensator on the system stability.

❷ Searching for the optimal specifications of the compensator machine which suit a given system and unified power factor.

3. The Mathematical Model

The mathematical model describes the whole system as one unit according to the control strategies defined above. On deriving this model, the following assumptions are made :

❶ The system is already synchronized with the utility network.

❷ Disturbances are due to wind speed; which is assumed to vary exponentially with proper mechanical time-constant.

❸ As the electrical time-constant is too small compared with the mechanical one; the mathematical model assumes *Time Varying Effective Values, (TVEV).*

❹ Sinusoidal quantities are assumed; neglecting thereby magnetic saturation effects and higher harmonics. This assumption is ensured due to the existence of the utility network, which is assumed to act as a large filter.

❺ The size of the smoothing reactor is large enough such that ripples on the dc-side of the inverter are neglected. Accordingly, the currents-shape on the ac-sides is assumed to be rectangular.

The proposed mathematical model assumes both the inverter and compensator as one integrated generating unit *(INCOM)*, synchronized to the utility network at a given unified power factor. The quasi-steady behaviour of this unit depends mainly on wind-speed variations. These variations are applied to the model according to a speed course; simulating thereby the wind-speed. It is assumed to vary exponentially [2] from one level to the other according to the relation :

$$\omega_r(t) = \omega_n + [\omega_r(t_o) - \omega_n] e^{-t/\tau_m} \qquad (1)$$

Due to speed variations the *TVEV* of the active power delivered by the inverter to the utility network will change as the cube of speed. Accordingly, the parameters of the *INCOM*-unit will be simultaneously changed to adapt themselves with the attained level of active power.

Among these parameters, the reactive-power delivered by the compensator is an important one. Therefore, the principle of power-equilibrium is an essential base for the mathematical model. Each time interval (ΔT), the balance of both active and reactive power through the system will be checked. Equations (2) give the equilibrium of the active and reactive power at the output-terminals of the *INCOM*-unit. The dynamic equation of the alternator gives its active power-equilibrium, Eq.(3). It may be noted here that the reactive power supplied by the alternator covers only the rectifier requirements.

$$P_i(t) = P_c(t) + P_n(t) \quad , \quad Q_i(t) = Q_c(t) - Q_n(t) \qquad (2)$$

$$P_e(t) = P_m(t) - \Delta P_b(t) \qquad (3)$$

Where:

$$P_m(t) = (P_m)_{rated} \cdot [\omega_r(t) / \text{speed limit}]^3$$

$$\Delta P_j(t) = J \cdot \omega_s^2 \cdot \omega_r(t) \cdot [\{\omega_r(t) - \omega_r(t_o)\} / dt]$$

$$P_b(t) = D_b \cdot \omega_s \cdot \omega_r(t)$$

Whereas, the static converters are represented by their usual performance equations, the machinery type elements *(alternator and compensator)* are represented by the equations obtained from their relevant equivalent-circuits. The equivalent circuit chosen for the compensator is that based on the concept of a ***Fictitious Conversion Point***, [3]. This equivalent-circuit, Fig.(3), is more convenient for cases where the synchronous machine is operating under quasi-steady conditions. According to this concept, the mutual coupling between the stator and rotor circuits of the compensator is represented by an ideal 3-phase fictitious converter with delay angle;

$$\alpha = \frac{\pi}{2}(1-S)\text{, where S the slip of oscillations.}$$

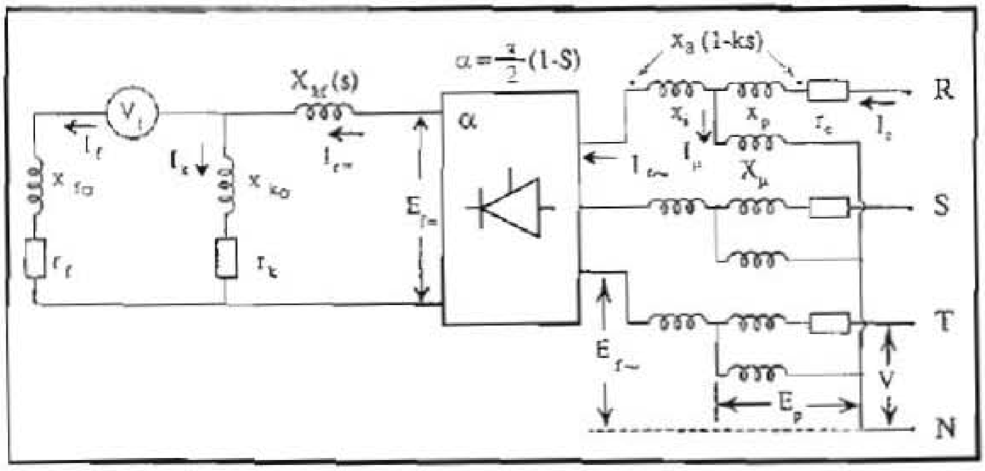

Fig. (3) : The 3-Phase Equivalent-Circuit of The Synchronous Compensator Using Fictitious Conversion Point.

This representation provides a good reversible energy pass between the stator and rotor circuits. Hence, the excitation voltage can be expressed by :

$$E_f = V + I_c \left[r_c + j\, X_s \right] \qquad (4)$$

Where:

$$X_s = x_p + x_a\,(1 - k.S) \quad , \quad k = I_r / I_c$$

This clarifies that, the synchronous reactance of the compensator , X_S, varies periodically with slip S, and becomes constant, $X_s = x_p + x_0$, at steady-state.

The manipulation between the individual equations of the system elements, according to control type, yields the mathematical model representing the whole system. Actually all equations describing the system can't be given here. As the paper is mainly concerned with the compensator behaviour, it follows now the model portion pertaining the subject. That is the mathematical model of the compensator and inverter :

A. Inverter DC- side :

$$I_d(t) = -K_1 + \sqrt{K_1^2 + P_e(t)/K_2} \tag{5}$$

$$V_i(t) = V_r(t) - I_d(t).r_d - L_d.\left[\left\{I_d(t) - I_d(t_o)\right\}/dt\right] \tag{6}$$

The factors K_1 and K_2 differs according to the control type :

Control Strategy	K_1	K_2
Type (1)	Zero	$\left[3r_g + \pi . X_s^* /(1+\cos\gamma_a)\right]\left(N\cos(\gamma_a/2)\right)^2$
Type (2)	$V_r(t)/2K_2$	$3r_g.(N.\cos(\gamma_a/2))^2$
Type (3)	$V_r(t)/2K_2$	$3r_g.(N.\cos(\gamma_a/2))^2$
Type (4)	$V_g(t)/(2N.r_g)$	$3r_g.(N.\cos(\gamma_a/2))^2$

B. Inverter AC- side :

$$I_s(t) = N.I_d(t).\cos(\gamma_a(t)/2) \tag{7}$$

$$\Phi_i(t) = \beta(t) - \gamma_\alpha(t)/2 \tag{8}$$

Where:

$$\beta(t) = \cos^{-1}(K_3 - K_4) \quad ; \quad \gamma_\alpha(t) = \beta(t) - \cos^{-1}(K_3 + K_4)$$

$$K_3 = V_i(t)/(3.N.V) \quad ; \quad K_4 = X_s''.I_d(t)/(\pi.N.V)$$

C. Compensator terminals :

The equations here are defined according to the unified power factor of the INCOM-unit, $\cos\phi$, as given below:

For lagging unified power-factor ;

$$I_c(t) = \frac{I_i(t).\left[\cos\Phi_i(t)/\cos\Phi_c(t)\right].\left[1 - \left\{\tan\Phi_i(t)/\tan\Phi\right\}\right]}{1 - \left[\tan\Phi_c(t)/\tan\Phi\right]} \tag{9}$$

$$\Phi_c(t) = \tan^{-1}\left[(1 - C_1.C_3)/(1/\tan\Phi + C_1.C_2)\right] \tag{10}$$

For unity-unified power-factor ;

$$I_c(t) = I_i(t).\sin\Phi_i(t)/\sin\Phi_c(t) \tag{11}$$

$$\Phi_c(t) = \tan^{-1}\left[I_i.\sin\Phi_i(t).\left\{C_4 - C_2\right\}\right] \tag{12}$$

Where :

$$C_1 = \left[\{1 - \tan\Phi_i(t)\} / \tan\Phi\right].\left[I_i(t).\cos\Phi_i(t) / V.\tan\delta_c(t)\right]$$

$$C_2 = r_c - X_s(t).\tan\delta_c(t)$$

$$C_3 = X_s(t) + r_c.\tan\delta_c(t)$$

$$C_4 = r_c / V + X_s(t) / \left[V.\tan\delta_c(t)\right]$$

D. Compensator dynamic:

The equation representing the frequency of compensator-rotor oscillation can be obtained from the instantaneous balance of the torques acting on the shaft :

$$T_j = \Sigma\,\text{Torgues} = T_s + T_{as} - T_d \tag{13}$$

Where :

$$T_s(t) = (3p / \omega_s).\left[\{V.E_{fc}(t) / Z_s(t)\}.\sin(\delta_c + \alpha_c) - E_{fc}^2(t).r_c / Z_s^2(t)\right]$$

$$T_{as}(t) = (3p / \omega_s.r_k).\left[X_s''.E_p(t) / (X_s'' + X_e)\right]^2.\left[1 - \omega_{rc}(t)\right]$$

$$T_d(t) = P_{mc}(t).\omega_{rc}(t) / \omega_s$$

$$T_j(t) = J.(\omega_s / p).d\{\omega_{rc}(t)\} / dt$$

Among these torques, the inertia torque $T_j(t)$ is the main source of oscillations. With help of Eq.(13) a differential equation is derived to define the relative rotor speed during oscillations :

$$d\{\omega_{rc}(t)\} / dt = (p / J\omega_s).\left[T_s(t) + T_{as}(t) - T_d(t)\right] \tag{14}$$

The equation is solved using *RUNGE KUTTA METHOD* and the computer results are shown in Fig.(7).

4- Computer Simulation and Results

An integrated computer program has been built carefully to simulate the proposed wind energy system and to get the behaviour of each included element; with special focussing on the steady and dynamic behaviours of synchronous compensator.

This program is able to produce internally the required initial conditions according to the control type. The program is also able to determine :

❶ The size and the different specifications of both the wind alternator and synchronous compensator according to the maximum available wind speed and the required power-factor of the unified unit.

❷ The suitable size of smoothing reactor, (r_d ,L_d), to have smoothed current in the dc-link according to given value of peak-to-peak dc voltage.

In order to permit partial control operation, the speed range of the wind-turbine is taken within *(0.85 to 1.15)* ω_r. In this range, optimal power of wind-turbine is provided [1,2]. Accordingly, the speed courses delivered to the computations are designed to suit this range.

The computer program is equipped with a deeply tested logic structure. All propable system-operation failures and instabilities are built in this structure. Values of the variables in relation to these mentioned failures and instabilities will be compared in each time interval with their expected safe values or limits. A detected failure will be signalized with a corresponding comment on the monitor, and the program stops. Examples for such failures and instabilities are :

❶ The upper or lower margin of the speed range lies out of the speed stability limits. The program determines internally these limits.

❷ Electrical and thermal instabilities which may occur in the alternator or the compensator and the corresponding excitation system.

❸ The advance angle "β" of the inverter exceeds its limits defined in the input data. The upper value is taken equal $\pi/3$ and the lower value is equal to the instantaneous calculated value of the commutation angle. The maximum value of the inverter commutation angle must be less than the minimum value of the advance angle "β" by 5° elec.,i.e.,

$$(\beta_{\min} - \gamma_{\max}) \leq 5^\circ \text{ elec.}$$

The computed results are illustrated in figures (4) to (9). Variations of the *INCOM*-unit parameters due to a wind speed course are given in figures (4) and (5). These variations represent almost the steady-state performance of the *INCOM*-unit.

The parameters on Fig.(4) are computed for unified 0.8 lagging power factor and the four types of control strategy. It can be concluded here, that fast response control is expected using type (3) of control strategy. To show the effect of the unified power-factor on the performance of the *INCOM*-unit, same parameters are given on figures (5) using type (3) of control strategy and two unified power-factors : 0.8 lagging and unity. Figures (6) to (9) illustrate the transient behaviour of the compensator during the period of speed variation taking into consideration the effect of damping circuit resistance. The variables representing this behaviour are the different machine torques (T_1, T_3, and T_{as}), the frequency of the compensator current, and the per-unit rotor speed. To exclude the effect of control method, Type (3) of control strategy is used. It is seen that oscillating behaviour can be avoided by suitable choice of the per-phase value of damping-circuit resistance. Having this value, a reverse design process will be necessary to get a decision about the proper damping circuit.

Conclusion

Both steady and transient behaviour of a synchronous compensator operating at the output terminals of a wind-energy system feeding a utility network have been investigated. For this purpose, an integrated computer program has been built carefully to suit the complicated nature of the suggested system. This nature is due to the speed varying operation of the wind-turbine and the mixed machine/power-electronics structure of the system. Accordingly, special attention has been given to the modeling problem. In addition to the mentioned behaviours, the program is able to give the performance of each element included in the system and a proper suggestion of its specifications. Therefore, the program is a helpful tool in hands of the system designer. Although the idea of using a synchronous compensator seems to be some how expensive but it yields an adequate fast response method of controlling the reactive power required; compared with other static compensating methods. Applying the synchronous compensator method, the short-circuit and resonance problems affecting the inverter operation can be avoided.

References

❶ M.M.I. EL-SHAMOTY, H.A. ABOU-TABL; *Control Strategy of Wind Turbine Alternator System Feeding A Utility Network*, Middle East Power System Conference MEPCON 89-paper no. GP-127, pp. 532-536.

❷ W. KLEINKAUF, W. LEONHARD; *Control of a Variable Speed Wind Converter Supplying Power to the Constant Frequency Line*, Second Meeting of Experts-Control of LS-WECS and Adaptation of Wind Electricity to the Network, 1980.

❸ M.M.I. EL-SHAMOTY, M.W. JABLONSKI, H.A. ABOU-TABL; *Equivalent-Circuit of a Synchronous Machine Containing Fictitious Conversion Point*, Proceedings of the International Conference on Electrical Machines, Part 2., Lausanna, Switzerland, 18-21 September, 1984.

❹ M.M.I. EL-SHAMOTY; *Design of Stabilizers of Voltage and Frequency in Networks Energized with variable speed Alternators*, Mansoura Bulletin, University of Mansoura, El-Mansoura, Vol. 11, No. 1, June 1986.

❺ A.M. EL-SERAFI, S.A. SHEHATA; *Effect of the Parameters of Synchronous Machine on Their Losses Under Thyristor Load operation*, Proceedings of International Conference on Electrical Machines, Part II, Paper No. E5/2, Brussels- Belguim, pp. E5/2-1 to E5/2-14, September 1978.

❻ H.A. ABOU-TABL, M.M.I. EL-SHAMOTY, S.A. EL-DRIENY; *Mathematical Model of Synchronous Compensator in Conjuction with a Rigidly Impulsed Inverter*, Mansoura Bulletin, Faculty of Engineering El-Mansoura University, El-Mansoura, EGYPT, Vol. 10, No. 1, June 1985.

❼ T.J.E. MILLER; *Reactive Power Control in Electric System*, John Wiley & Sons, Inc., NewYork, 1982.

❽ J. SCHEAFER; *Rectifier Circuits Theory and Design*, John Wiley & Sons, 1965.

❾ AEG. TELEFUNKEN; *Shaft Driven Alternator*, Ref. list 1980.

List of Symbols

D_b	The breaking torque constant, Nw.m.
E_{fc}	The ac excitation voltage of syn. compensator, Volts.
E_p	The syn. compensator internal voltage, Volts.
I_d	The d.c. link current, Amperes.
I_g	The wind generator armature current, Amperes.
I_i	The a.c. inverter current, Amperes.
I_n	The utility network current, Amperes.
I_c	The syn. compensator armature current, Amperes.
I_f	The syn. compensator field current, Amperes.
I_μ	The syn. compensator magnetizing current, Amperes.
I_k	The syn. compensator damping circuit current, Amperes.
I_r	The syn. compensator equivalent rotor current, Amperes.
J	The total polar moment of inertia, kg.m^2.
L_d	The inductance of d.c. link smoothing reactor, Henery
r_c	The synchronous compensator resistance, Ohms.
r_d	The d.c. link resistance, Ohms.
r_g	The wind generator resistance, Ohms.
r_k	The syn. compensator per phase damping resistance, Ohms.
r_f	The syn. compensator field resistance. Ohms.
S	The slip of oscillation.
τ_m	The mechanical time-constant.
T_{as}	The compensator asynchronous torque, kg.m.
T_d	The compensator breaking torque, kg.m.
T_s	The compensator synchronous torque, kg.m.
T_j	The compensator inertia torque, kg.m.
d_t	The time interval in seconds.
V_g	The wind alternator terminals voltage, Volt.
V_r	The d.c. voltage behind smoothing reactor, Volt.
V_i	The d.c. voltage applied to the inverter, Volt.
V	The utility network voltage, Volt.
ω_r	The instant relative speed of the wind-turbine.
ω_n	The proposed relative speed of the wind-turbine.
ω_{rc}	The instant relative speed of the syn. compensator.
ω_s	The syn. compensator relative speed.
N	Constant equal to $\sqrt{6}/\pi$.
p	The syn. compensator number of pole pairs.
P_b	The friction and damping power of wind/alternator, Watts.

P_e	The electrical power of wind/alternator, Watts.
P_m	The mechanical power of wind/alternator, Watts
P_c	The compensator active power, Watts.
P_i	The inverter active power, Watts
P_n	The utility network active power, Watts.
ΔP_j	The inertia power variation of wind/alternator, Watts.
Q_c	The compensator reactive power, VAR.
Q_i	The inverter reactive power, VAR.
Q_n	The network reactive power, VAR.
X_s	The synchronous reactance of the syn. compensator, Ohms.
x_a	The armature reaction reactance of the compensator, Ohms
x_p	The leakage reactance of the syn. compensator, Ohms.
x_f	The fictitious reactance located behind E_f, Ohms.
X_μ	The compensator stator to rotor mutual reactance, Ohms.
x_{fo}	The compensator field-circuit leakage reactance, Ohms.
x_{ko}	The compensator damping-circuit leakage reactance, Ohms.
X_{kf}	The compensator damper-field leakage mutual reactance, Ohms.
X_s''	The sub-transient reactance of the compensator, Ohms.
X_g''	The sub-transient reactance of the alternator, Ohms.
X_e	The external reactance connected to the field, Ohms.
Z_s	The synchronous impedance of the compensator, Ohms.
α	The delay angle of the controlled rectifier, Degrees
ϕ_c	The syn. compensator power-factor, Degrees.
ϕ_i	The inverter power-factor, Degrees.
ϕ_n	The utility network, unified, power-factor, Degrees.
δ_c	The synchronous compensator torque angle, Degrees.
γ_c	The syn. compensator internal voltage angle, Degrees.
γ_o	The commutation angle of uncontrolled bridge, Degrees
γ_α	The commutation angle of controlled bridge, Degrees.
β	The inverter bridge advance angle equal (180 - α), Degrees.

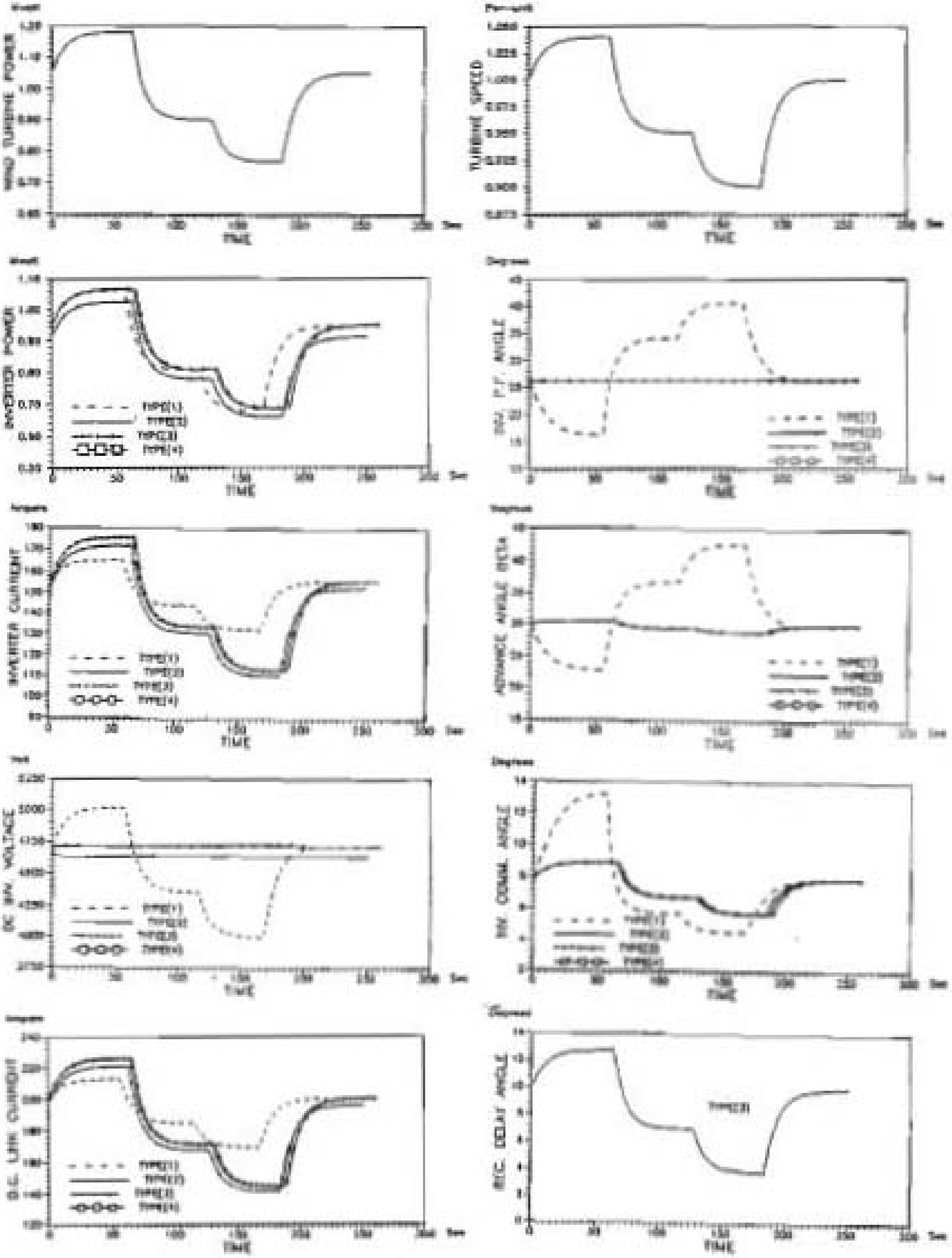

Fig(4) : The Effect Of Four Strategies Control Types On INCOM-Unit Steady-State Characteristics, At 0.8 Lag. P.F.

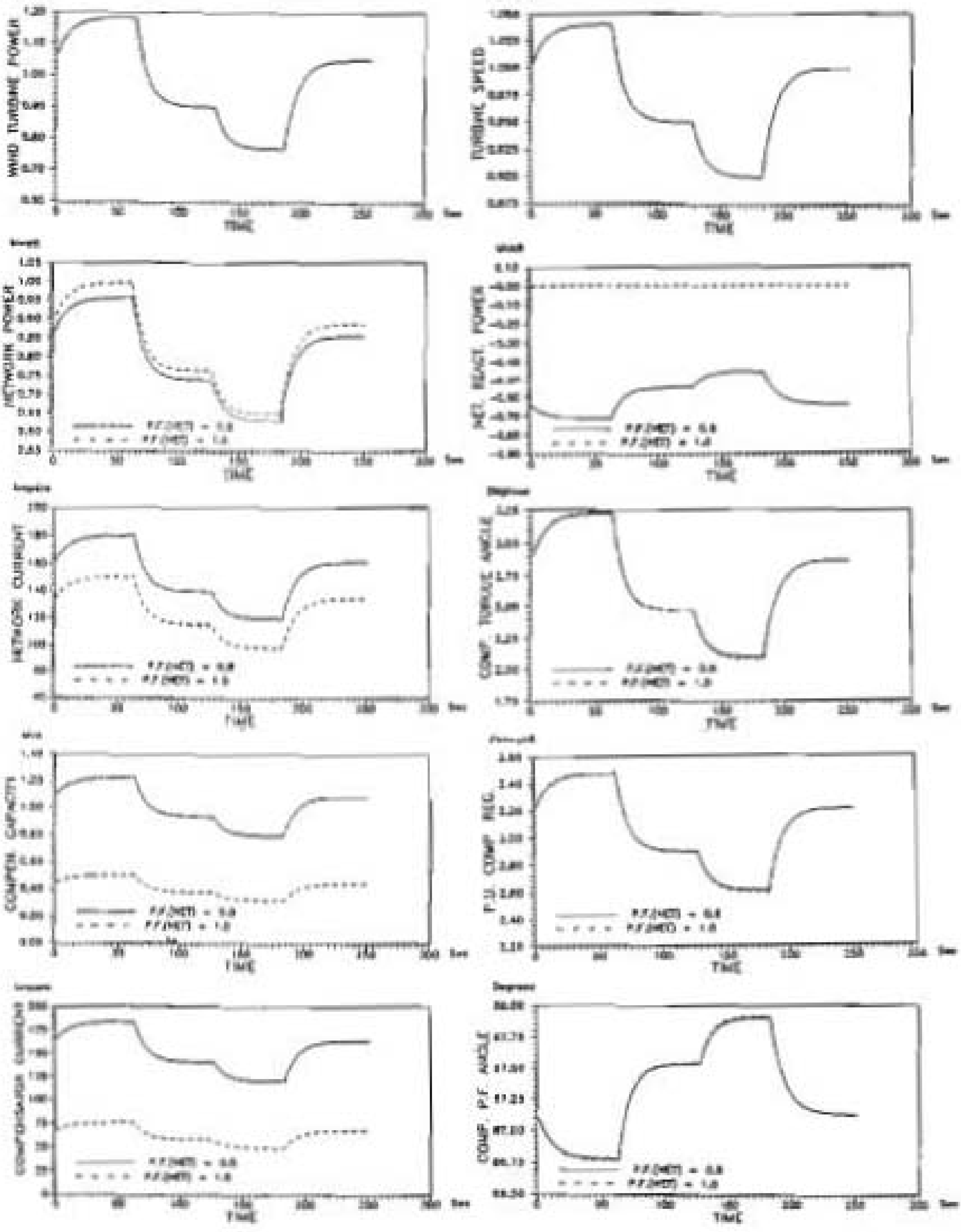

Fig(5) : The Effect Of Unified Power-Factor On INCOM-Unit Steady-State Characteristics, For Control Type(3).

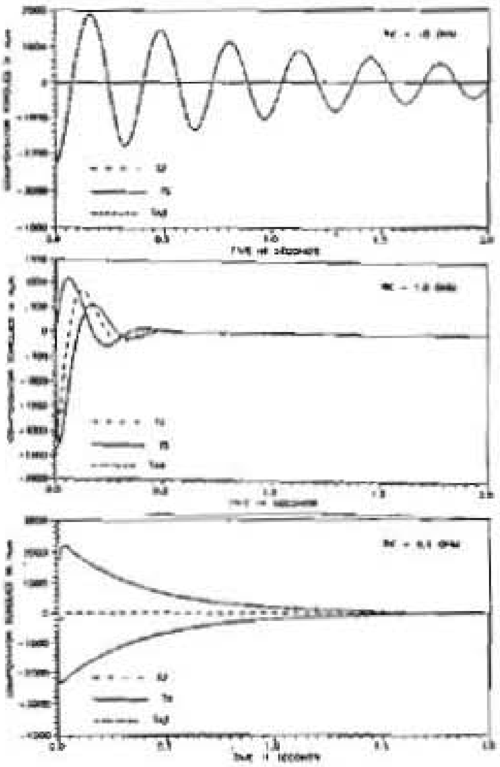

Fig. (6) : Compensator Torques At Instant Of Speed Variation, Type(3), P.F.=0.8

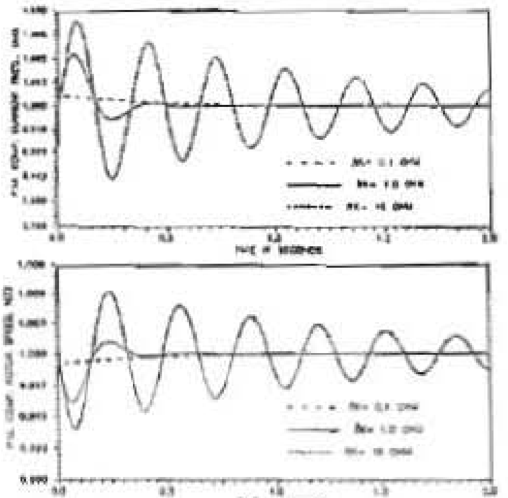

Fig. (7) : Compensator Frequencies At Instant Of Speed Variation , Type (3) , P.F. 0.8

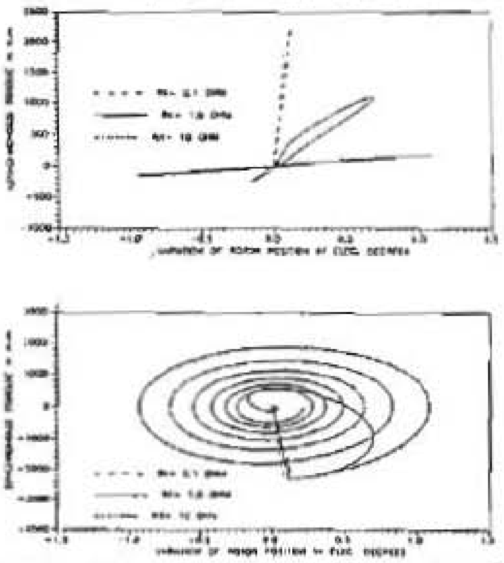

Fig. (8) : Effect Of Damping-Circuit Resistance On Compensator Torques , Type(3) ,P.F. 0.8

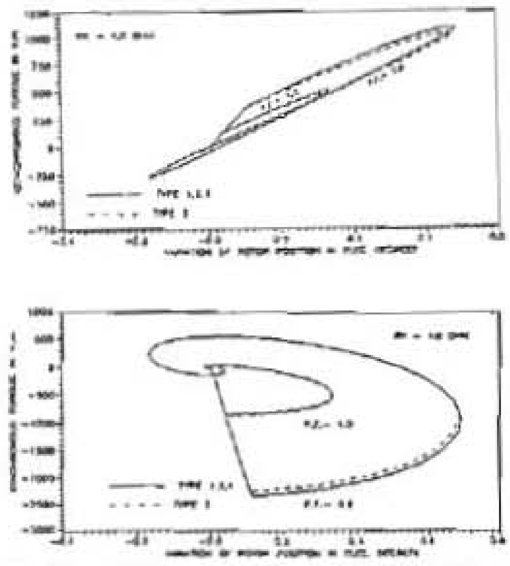

Fig(9) : Effect of Four Types & Unified P.F. On Compensator Torques.